SELKA

Intriguing appearance with high performance

With angular end caps, deep interior channel, and pleasing aspect ratio, Selka presents a crisp, intriguing appearance. Widespread uplight, comfortable downlight, and high efficacy and light output all make Selka eminently practical.

Selka offers two distinctive downlight options: the Regressed Light Guide, with a smoothly luminous effect; and the Regressed parabolic louvers Optic, with a crisp visual texture.

For direct/indirect distributions, the Widespread Indirect Optic produces smoother ceiling brightness and wide spacing.

Form

The eight planes and champfered edges of the Selka end cap creates striking angular entry into the deep channel of the housing. Contrast between the brightness of the reflector panels the Regressed Lambertian Optic, and three-dimensional surfaces of the end cap enhances the effect.

Parabolic Louver Optics are offered in two finishes with excellent shielding: Matte, for a quiet glow, and specular, for sharp cut off.

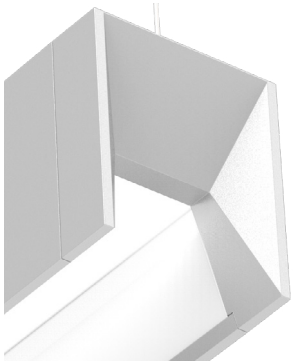

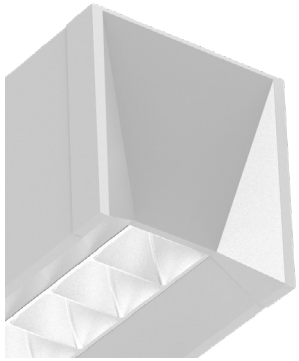

A compact 3 3/8" x 3 7/8" profile can accommodate all drivers

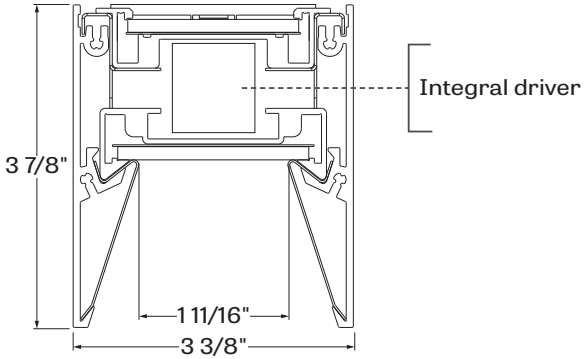

Light Guide

LumenWerx employs light guide technology in a variety of optics, including the Widespread Indirect Optic and Recessed Light Guide Optic used in Selka. Precise coupling of light emitted by the LED array determines the thickness of the guide. Optical grade virgin acrylic assures high total internal reflection. Nanostructures etched into the distributing surface of the guide extra light into the desired pattern. A reflector on the opposite side redirects stray light back into the beam.

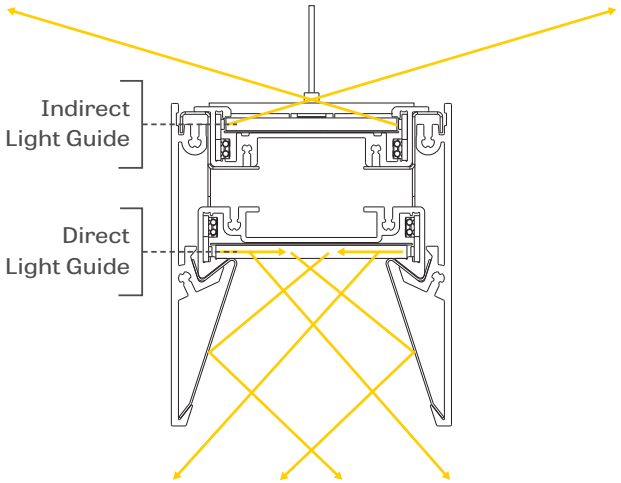

SELKA

Selka Optics

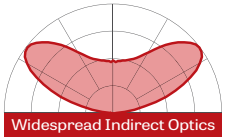

Selka pendants are available with Direct/Indirect and Direct light distributions. Lumen output up to 1200 lumens per foot is available for both uplight and downlight. Selka offers the full range of electrical options as well as separate control over direct and indirect lighting.

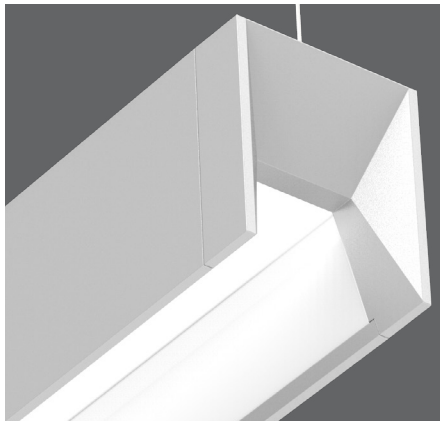

Regressed Light Guide - RLG

The Regressed Light Guide Optic consists of side-mounted LED arrays, coupled to an optical-grade acrylic light guide engraved with micro-structure optics that extract light into a lambertian distribution. An upper reflector of 98% reflective, diffuse aluminum enhances system efficiency.
The entire assembly is regressed 2" into the luminaire housing for deep lateral shielding. Angled side panels with a high-reflectance, matte white finish direct light into a soft and wide downlight distribution, with spacing criteria of 1.4.

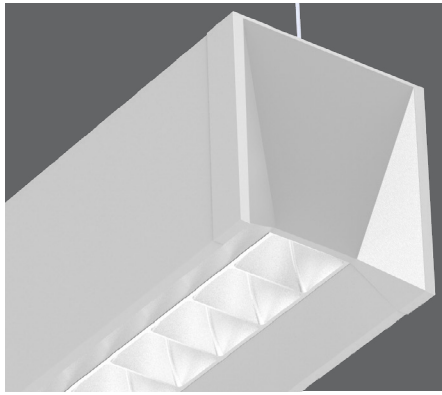

Parabolic Louvers (SPL and MPL)

Selka's parabolic louvers provide excellent shielding and a pleasing crisp visual texture. The precisely molded louvers consist of 1" deep blades and side reflectors with shielding of 50° lengthwise and 45° cross wise
The entire assembly is regressed 2" into the luminaire housing for deep lateral shielding. Angled side panels with a high-reflectance, matte white finish direct light into a soft downlight distribution, with spacing criteria of 1.1. Choose from Specular (SPL) or Matte (MPL) louver finish

Widespread Indirect Optics - WIO

The Widespread Indirect Optic (WIO) uses two vertically oriented LED arrays that couple light into the edges of a linear light guide. A specially designed TIR/microstructure extracts light into the desired "batwing" distribution.

Peak intensity hits at 125° while suppressing direct uplight. Peak-to-zenith intensity ratio is 2:1, outstanding for a narrow luminaire. WIO produces noticeably smoother ceiling brightness than a typical lambertian uplight distribution, permitting generally wider spacing as well.

Distribution

Separately control indirect and direct lighting. for both regressed Light Guide and Regressed Baffle Optic

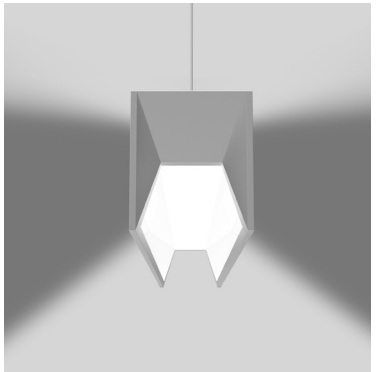

Direct/indirect

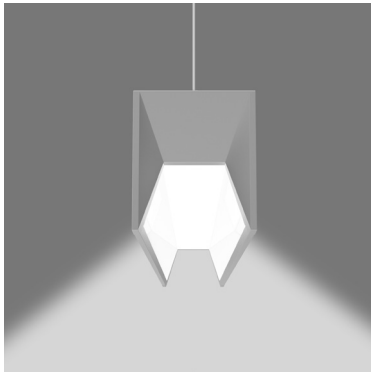

Direct

Performance

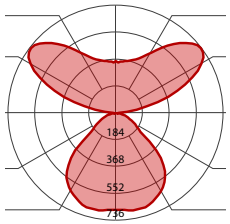

DIRECT REGRESSED LIGHT GUIDE (RLG) INDIRECT WIDESPREAD OPTICS (WIO)

LED output	Color Temp	Watts	Direct Lumens	Indirect Lumens	Total Delivered Lumens	Efficacy LPW
low output	4000K	35	2000	2000	4000	114
medium output	4000K	44.5	3000	2000	5000	112
high output	4000K	54	4000	2000	6000	111
ultra high output	4000K	62.5	4800	2000	6800	109

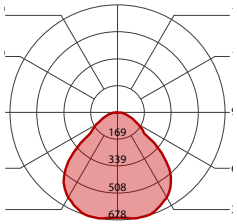

DIRECT REGRESSED LIGHT GUIDE (RLG)

LED output	Color Temp	Watts	Nominal Delivered Lumens	Efficacy LPW
low output	4000K	17.5	2000	113
medium output	4000K	27	3000	111
high output	4000K	36.5	4000	109
ultra high output	4000K	45	4800	107

Selka Offering

- Direct/Indirect & Indirect
- 2 direct optic options
- Indirect widespread optic
- Integral driver
- Integral emergency option
- 4, 6 & 8 standard modules
- Continuous runs
- Up to 4800 lumens/4'
- standard 3000K, 3500k & 4000k
- Up to 114 LPW